W-section Steel Laser Cutting, Robotic Loading & Welding and Surface Shot Blasting Workstation

Process flowchart

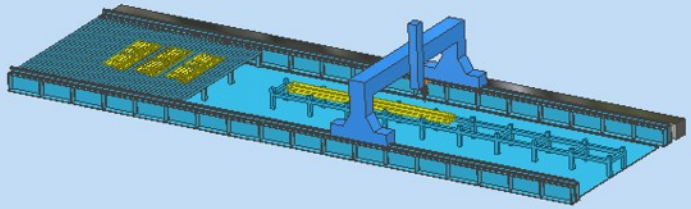

W-beam Laser Cutting

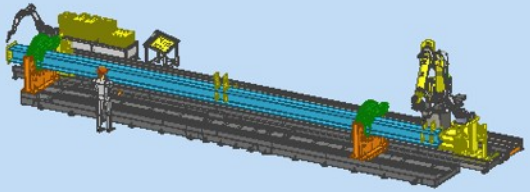

Robotic Loading & Welding

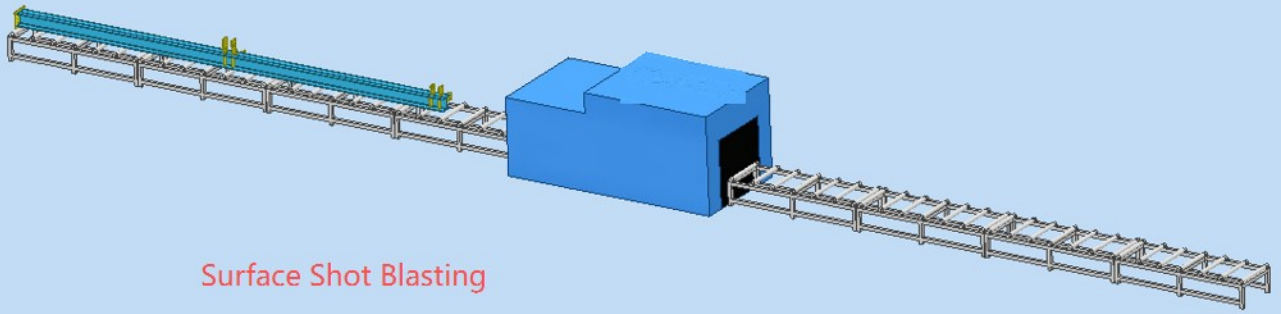

Surface Shot Blasting

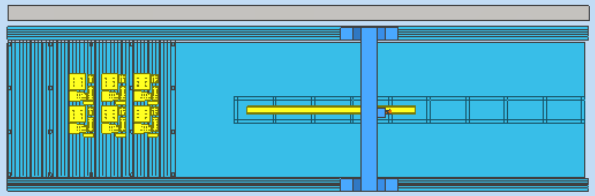

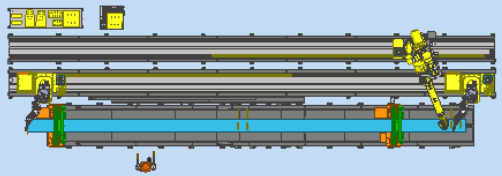



Laser Cutting Area

01

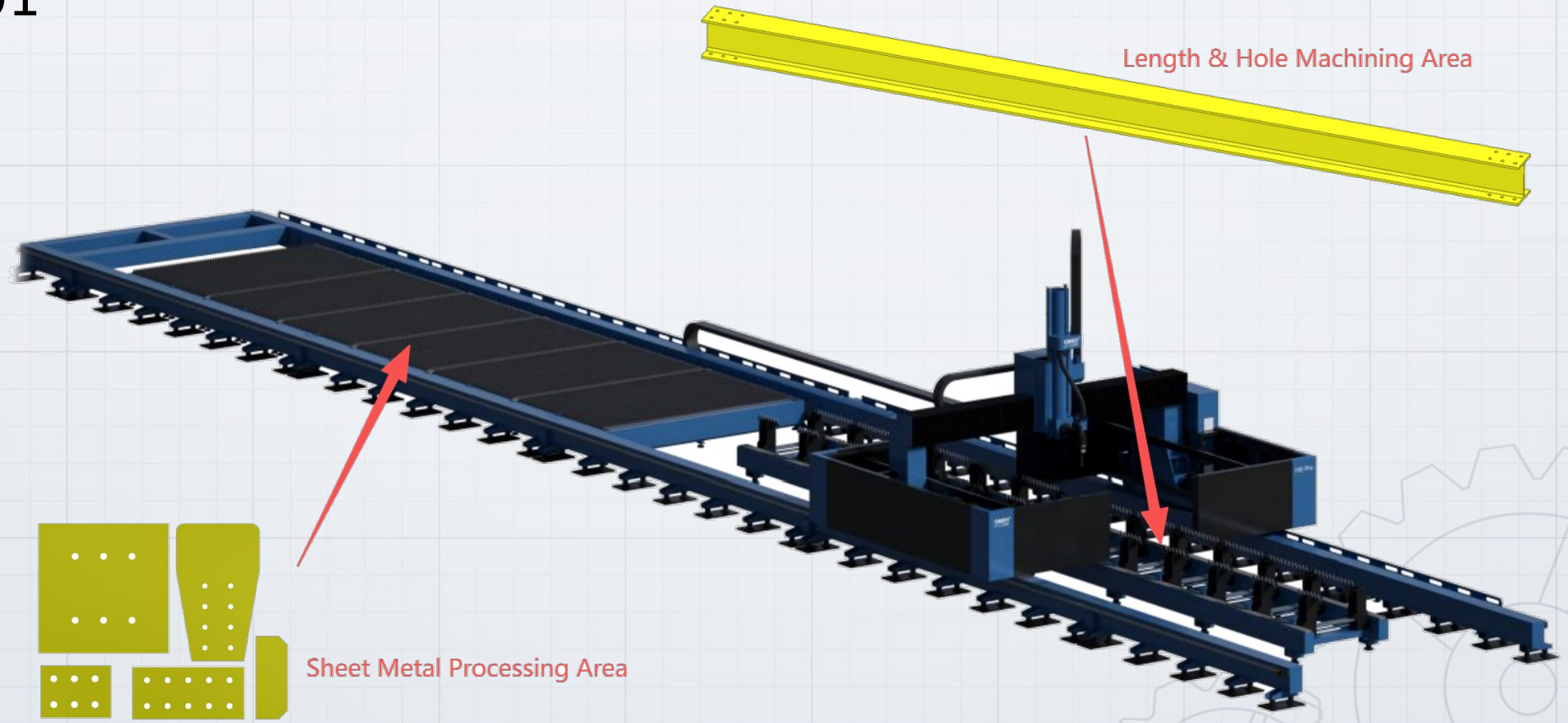

Name	Qty	Brand	Brand Country / Region
Fiber Laser Source	1 set	Raycus 20KW	China
Fiber Laser Cutting Head	1 set	Black Diamond	China
Fiber Control System	1 set	Baichu 9200	Shanghai, China
X, Y, Z Axis Sliders	1 set	SHAC	Taiwan, China
X, Y, Z Axis Linear Guides	1 set	ROUST	Germany
X, Y, Z Axis Rack & Pinion	1 set	EBLUN	Taiwan, China
X, Y, Z Axis Servo Motors & Drivers	4 pcs	Baichu	Shanghai, China
Reducer	Matched set	Tektomag	Germany
Pneumatic System	Matched set	SMC	China
Electric Proportional Valve	1 pc	SMC	China
Machine Tool Accessories	1 set	LD LASER	China
Machine Tool Bed	1 unit	LD LASER	China
Control Cabinet	1 set	LD LASER	China
Circuit Breaker, Relay & Power Supply	1 set	Delixi	China
Water Chiller	1 set	Tongfei	China
Computer	1 unit	Industrial Dedicated Controller	China

Name	Qty
Fiber Laser Source	1 set
Fiber Laser Cutting Head	1 set
Fiber Control System	1 set
X, Y, Z Axis Sliders	1 set
X, Y, Z Axis Linear Guides	1 set
X, Y, Z Axis Rack & Pinion	1 set
X, Y, Z Axis Servo Motors & Drivers	4 pcs
Reducer	Matched set
Pneumatic System	Matched set
Electric Proportional Valve	1 pc
Machine Tool Accessories	1 set
Machine Tool Bed	1 unit
Control Cabinet	1 set
Circuit Breaker, Relay & Power Supply	1 set

02

Robot material loading and welding.

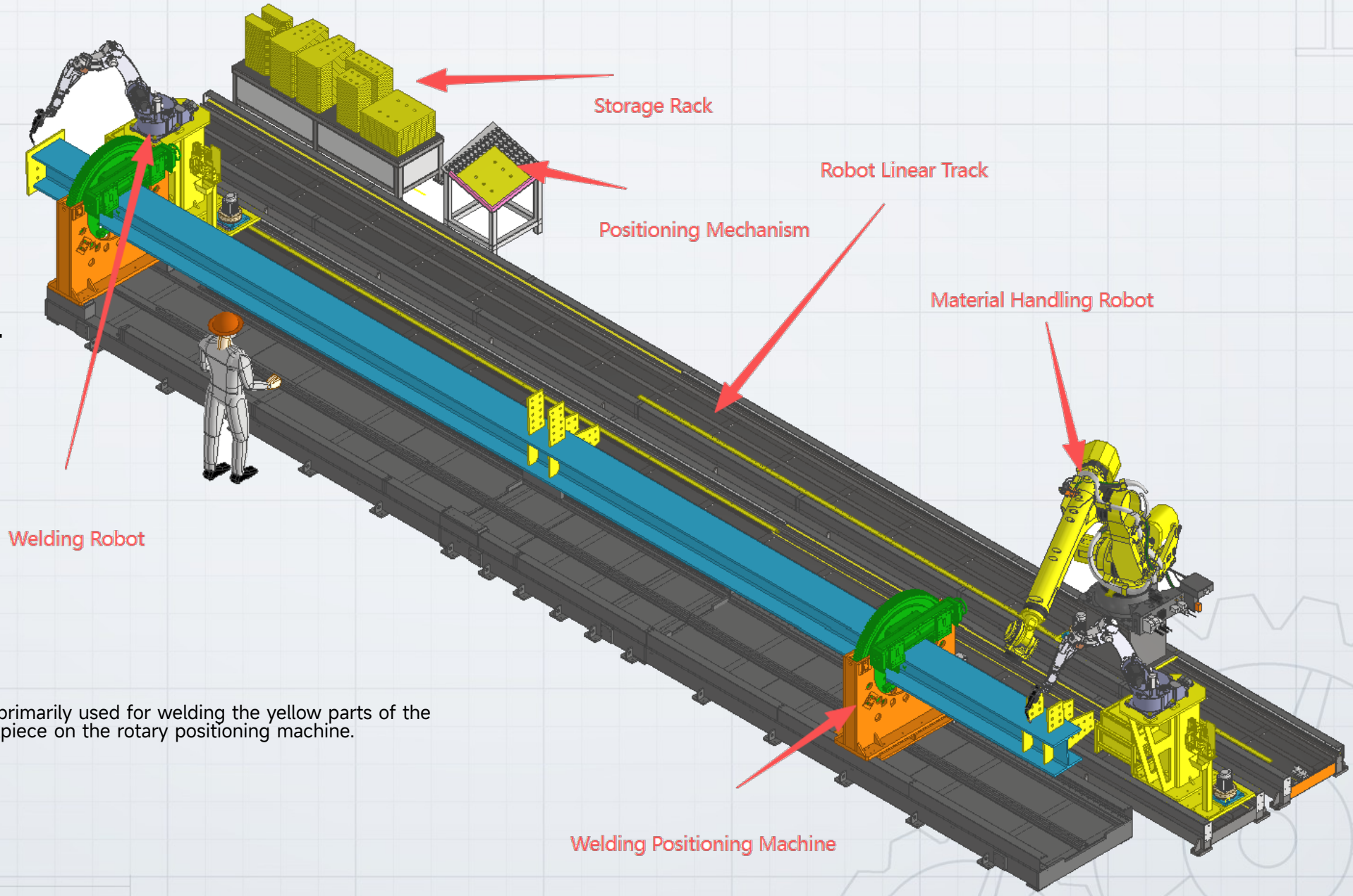

It is primarily used for welding the yellow parts of the workpiece on the rotary positioning machine.

Name	Qty	Brand	Brand Country / Region
Welding Robot	2 sets	Panasonic	Japan
External Axis Motor for Welding Robot	2 sets	Panasonic	Japan
Welding Power Source	2 sets	Panasonic	Japan
Handling Robot	1 set	Fanuc	Japan
External Axis Motor for Handling Robot	1 set	Fanuc	Japan
Robot Moving Slide (for Welding Robot)	1 set	Chenyuda	China
Robot Moving Slide (for Handling Robot)	1 set	Chenyuda	China
Welding Positioner	1 set	Chenyuda	China
Material Rack & Positioning Table	1 set	Chenyuda	China

Item	Parameter
Welding Robot Model	TM1400 (Reach: 1400mm)
Reach	1400mm
Repeat Positioning Accuracy	±0.08 mm
Welding Power Source	500GS6
Handling Robot Model	R-2000iC/210L
Reach	3100mm
Repeat Positioning Accuracy	±0.05 mm
Max Travel of Robot Moving Slide (for Welding Robot)	12000 mm
Slide Positioning Accuracy	±0.1 mm/m
Max Travel of Robot Moving Slide (for Handling Robot)	14500 mm
Slide Positioning Accuracy	±0.1 mm/m
Overall Dimension	16000 × 4550 × 3200 mm

03

Surface shot blasting treatment







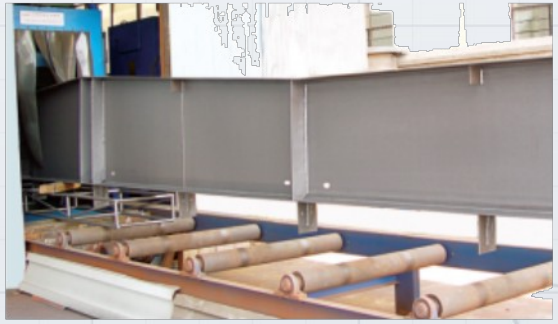



Item	Parameter Value	Item
Equipment Model	HGP0816	Equipment Model
Workpiece Passing Size - Cross Section (Width × Height)	800 × 1600 mm	Workpiece Passing Size - Cross Section (Width × Height)
Workpiece Passing Size - Workpiece Length	13600 mm	Workpiece Passing Size - Workpiece Length
Quality Standard - Surface Cleanliness	A-B Sa2 ~ Sa2½	Quality Standard - Surface Cleanliness
Quality Standard - Surface Roughness	15 ~ 50 μm	Quality Standard - Surface Roughness
Shot Blaster - Quantity	8	Shot Blaster - Quantity
Shot Blaster - Shot Blasting Capacity	8 × 200 kg/min	Shot Blaster - Shot Blasting Capacity
Shot Blaster - Power	8 × 11 KW	Shot Blaster - Power
Inlet & Outlet Roller Conveyor - Allowable Load	1000 kg/m	Inlet & Outlet Roller Conveyor - Allowable Load
Inlet & Outlet Roller Conveyor - Conveying Speed	0.5 ~ 5 m/min	Inlet & Outlet Roller Conveyor - Conveying Speed
Dust Removal Air Volume	18000 m³/h	Dust Removal Air Volume
Abrasive Recycling Capacity	120 T/h	Abrasive Recycling Capacity
Main Machine Overall Dimension (L × W × H)	6100 × 2100 × 2900 mm	Main Machine Overall Dimension (L × W × H)

Thank you

XiaMen ChenYuDa Intelligent Equipment Co.,Ltd